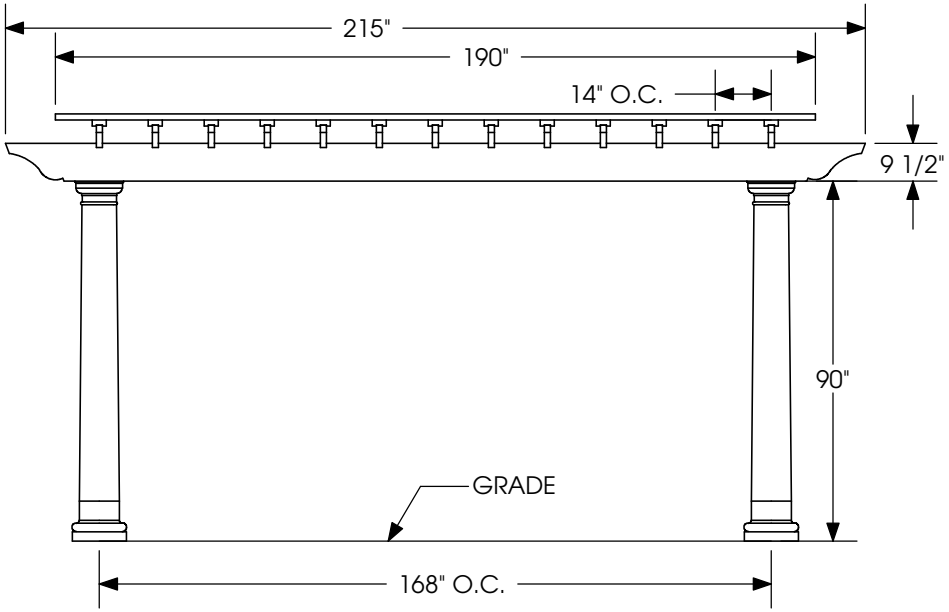

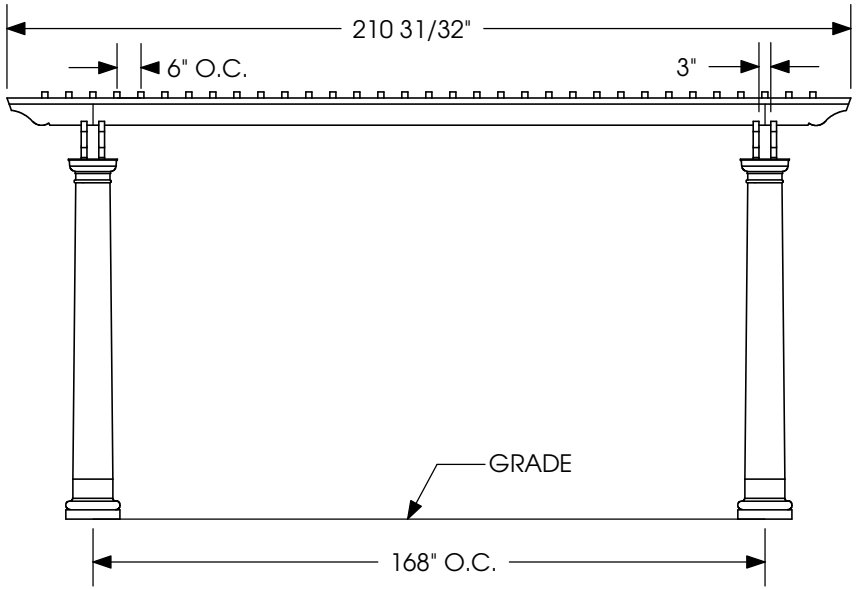

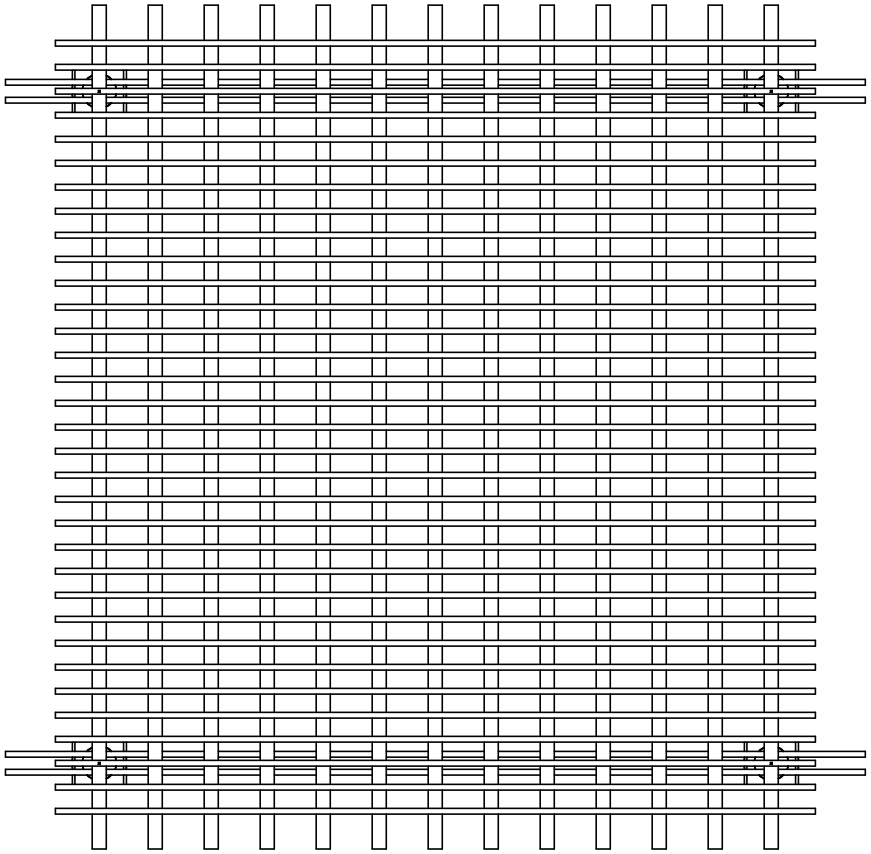

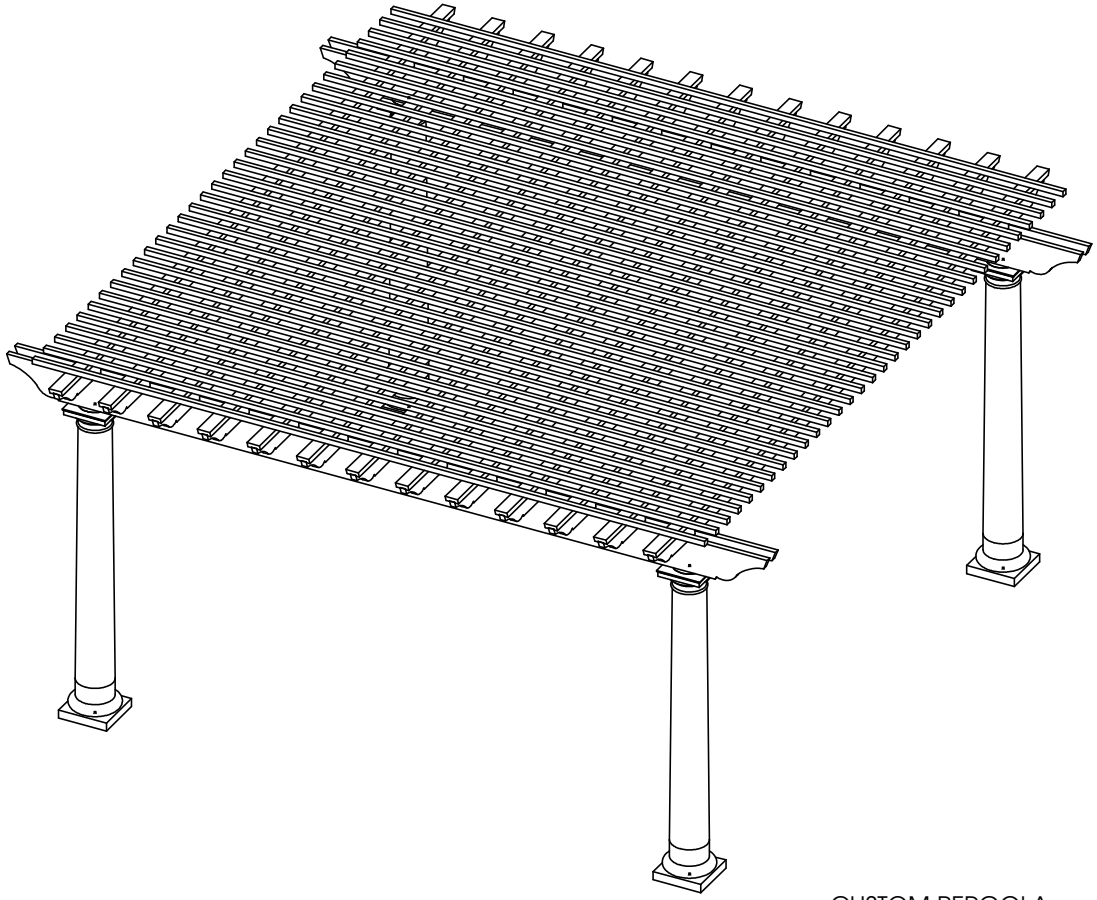

CUSTOM PERGOLA
BY TRELLIS STRUCTURES INC.